UNCC Fall 2025 Senior Design Project

© 2024 Qorvo US, Inc. | Qorvo Confidential & Proprietary Information

Objectives

- **Primary Goals (First Semester)**
  - **Develop and demonstrate a multi-protocol mesh network utilizing the QPG6200L**
    - **Design a custom PCB to demonstrate multiple peripherals including (X)**
    - **Must have bi-directional communication with a web interface**
    - **“Battery powered edge sensor”**
- **Secondary Goals (Second Semester)**
  - **Revise SDR Receiver PCB**
  - **Develop Bluetooth transmitter module, and implement a gateway application**

© 2024 Qorvo US, Inc.
© 2025 Qorvo US, Inc. – All Rights Reserved

QPG6200L

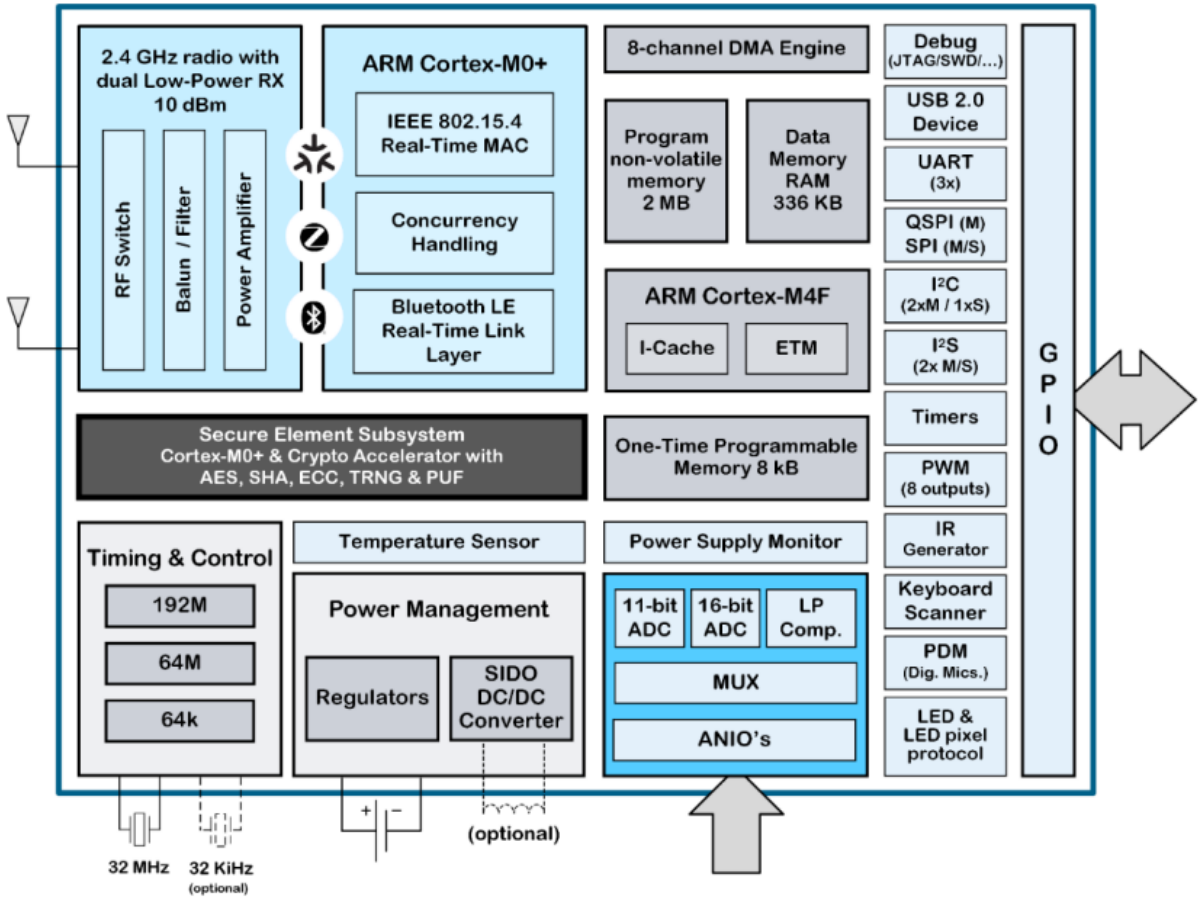

© 2024 Qorvo US, Inc.
© 2025 Qorvo US, Inc. – All Rights Reserved

Research Topics

- Mesh Networking
- IoT Protocols (BLE, Thread, Zigbee)
- Peripherals (PDM, PWM, I2S, ADC’s, UART, USB)
- Transceiver Architectures
- 2024 Senior Design Documentation

© 2024 Qorvo US, Inc.
Qorvo Confidential & Proprietary Information